GPTech

SMART PV INVERTERS *INTERNATIONAL*

PV500WD-INT-O / PV540WD-INT-O / PV630WD-INT-O / PV675WD-INT-O
PV750WD-INT-O / PV800WD-INT-O / PV900WD-INT-O / PV975WD-INT-O

Best expertise in power electronics

- Outdoor and indoor models
- Compact, reliable and robust design for all climate conditions
- Convenient front access for service and maintenance
- Best peak efficiency of over 98%
- Wide thermal operation range 4ºF/140ºF (-20ºC/60ºC)

Certifications

- IEC
- EMC
- CE Marking

Optionals

- Reactive power compensation at night. No extra devices needed for VAR support
- Up to 20 DC inputs protected by fuses
- External DC and AC disconnection modules
- Remote monitoring
- Extended warranty according to customer needs

Services and Warranty

- Global After Sales Service, Maintenance and Technical Assistance 24/7
- Warranty Services
- Preventive Maintenance Programs
- Training Programs

Maximum Efficiency Curve

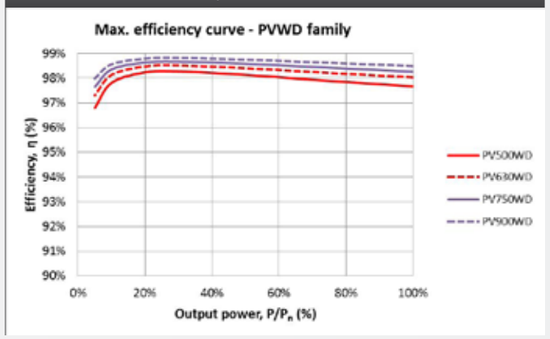

PVWD series one-line diagram

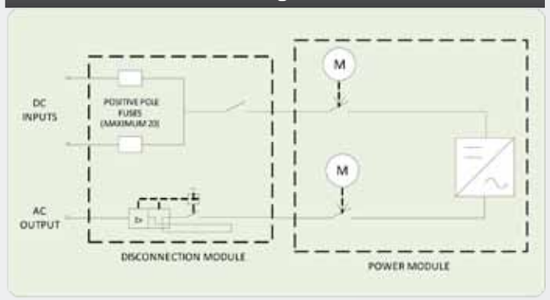

HIGHEST FLEXIBILITY IN INVERTER PERFORMANCE

- Flexible power operation range based on the required power factor.
- Wide DC operation range due to the 1800 A maximum input current.
- Maintains maximum power at extreme ambient conditions
- Redundant air cooling system for best performance in extreme climates.

ADVANCED POWER CONTROL

- Remote control of active and reactive power.
- Ramp rate response of programmable power in order to guarantee the grid balance.
- Three modes of operation for Low Voltage Ride Through
  1· Maximum reactive power injection
  2· Constant power factor
  3· No current injection
- Instant power regulation according to frequency variations.

> GPTech Smart PV inverters comply with the most demanding grid codes in the world. They adapt to the necessities of any market due to a flexible power operation range depending on the power factor. With an easy integration to the grid and low power consumption, these devices offer remote control of active and reactive power, as well as ramp rate response guaranteeing the grid stability

GPTech Spain ▪ Camino de los Descubrimientos 17, 41092 - Sevilla ▪ **Phone:** (+34) 954 181 521
GPTech USA ▪ 429 Lenox Avenue, Suite 5W16 Miami Beach, FL 33139 US ▪ **Phone:** (+1) 305 510 5796
mail: info@greenpower.es

	FAMILY PV500		FAMILY PV630	
	PV500WD-INT-O	PV540WD-INT-O	PV630WD-INT-O	PV675WD-INT-O
DC Input				
Voltage range (MPPT)[1]	375 – 825Vdc	375 – 825Vdc	455 – 825Vdc	455 – 825Vdc
Max. input voltage	1000Vdc			
Max. Input current	1800A	1900A	1800A	1900A
AC Output				
Nominal AC Voltage	3 x 240Vac		3 x 300Vac	
AC voltage range[2]	216 – 264Vac		270 – 330Vac	
Frequency	50/60Hz			
Frequency operation range	47 – 63Hz			
Rated AC power @ 50°C (122 °F)	560kVA	600kVA	700kVA	750kVA
Rated AC power @ 35°C (95 °F)	600kVA	645kVA	750kVA	805kVA
Rated AC power @ 50°C (122 °F) and PF of 0.9	500kW	540kW	630kW	675kW
Maximum output current	1450A	1550A	1450A	1550A
Total Harmonic Distortion (THD)	< 3%			
Power factor	Adjustable			
Galvanic Isolation	No			
Efficiency				
European efficiency	98.11%	98.11%	98.35%	98.35%
CEC efficiency	98.10%	98.10%	98.37%	98.37%
Self-consumption in standby	<= 200W			
Self-consumption in operation[3]	<= 3kW			
Ambient Conditions				
Operation ambient temperature	-4°F / 140°F (-20°C / 60°C)			
Operation ambient temperature (without de-rating)	-4°F / 95°F (-20°C / 35°C)			
Storage and transport temperature	-22°F / 149°F (-30°C / 65°C)			
Maximum relative humidity	95% without condensation			
Fresh air consumption	6000 m3/h			
Max. altitude above sea level	3000m			
Mechanical characteristics				
Dimensions (H / W / D)	86.61x78.74x29.52in (2200x2000x750mm)			
Weight	2100kg (4629lbs)			
Environment rating	NEMA 3R, IP54			
AC Protections				
AC overvoltage protection	Yes			
Anti-islanding	Yes			
Grid voltage variations	Yes			
Frequency failures	Yes			
Asymmetric currents	Yes			
Low Voltage Ride Through (LVRT) capability	Yes			
DC Protections				
DC overvoltage protection	Yes			
Inverter shutting down on overload error	Yes			
PV-field isolation detector	Yes			
Panel disconnection capability	Yes. DC Contactor			
Other Protections				
Breaker protections of auxiliary systems	Yes			
Auxiliary systems overvoltage protection	Yes			
Power Control Features				
Reactive control by external signal	Yes			
Reactive control by internal configuration	Yes. Timetable PF configuration or voltage dependent function			
Reactive injection for LVRT	Yes. Configurable operation mode			
Over frequency active power response	Yes. Configurable droop			
Ramp rate control	Yes. Under irradiance value restriction			
External power limitation	Yes			
STATCOM mode: Reactive injection at night	Optional (requires additional elements)			
Interfaces				
Touch-HMI	Optional			
MODBUS RTU/TCP communication protocol	Optional			
Luminous indicator, start/stop control	Yes			
Emergency stop	Optional (requires additional elements)			
Remote monitoring system, with GSM/GPRS modem	Optional (requires additional elements)			
Legal standards				
IEC 62109-1, IEC 62109-2	Yes			
NEC Compliance	Yes			
United States - UL 1741 Listing Mark	Certification in process			
Canada - cUL Listing Mark	Certification in process			
CSI/CEC Performance Testing (California)	Certification in process			
IEEE 1547	Certification in process			

Notes
1. At 100% U AC, nom and cos = 1
2. Further AC voltages can be configured
3. Self-consumption at rated operation

	FAMILY PV750		FAMILY PV900	
	PV750WD-INT-O	PV800WD-INT-O	PV900WD-INT-O	PV975WD-INT-O
DC Input				
Voltage range (MPPT)[1]	525 – 825Vdc	525 – 825Vdc	580 – 825Vdc	620 – 825Vdc
Max. input voltage	1000Vdc			
Max. Input current	1800A	1900A	1900A	1900A
AC Output				
Nominal AC Voltage	3 x 355Vac	3 x 355Vac	3 x 400Vac	3 x 430Vac
AC voltage range[2]	319 – 391Vac	319 – 391Vac	360 – 440Vac	387 – 473Vac
Frequency	50/60Hz			
Frequency operation range	47 – 63Hz			
Rated AC power @ 50°C (122 °F)	830kVA	890kVA	1005kVA	1080kVA
Rated AC power @ 35°C (95 °F)	890kVA	950kVA	1075kVA	1155kVA
Rated AC power @ 50°C (122 °F) and PF of 0.9	750kW	800kW	900kW	975kW
Maximum output current	1450A	1600A	1550A	1550A
Total Harmonic Distortion (THD)	< 3%			
Power factor	Adjustable			
Galvanic Isolation	No			
Efficiency				
European efficiency	98.45%	98.45%	98.55%	98.59%
CEC efficiency	98.50%	98.50%	98.61%	98.66%
Self-consumption in standby	<= 200W			
Self-consumption in operation[3]	<= 3kW			
Ambient Conditions				
Operation ambient temperature	-4°F / 140°F (-20°C / 60°C)			
Operation ambient temperature (without de-rating)	-4°F / 95°F (-20°C / 35°C)			
Storage and transport temperature	-22°F / 149°F (-30°C / 65°C)			
Maximum relative humidity	95% without condensation			
Fresh air consumption	6000 m3/h			
Max. altitude above sea level	3000m			
Mechanical characteristics				
Dimensions (H / W / D)	86.61x78.74x29.52in (2200x2000x750mm)			
Weight	2100kg (4629lbs)			
Environment rating	NEMA 3R, IP54			
AC Protections				
AC overvoltage protection	Yes			
Anti-islanding	Yes			
Grid voltage variations	Yes			
Frequency failures	Yes			
Asymmetric currents	Yes			
Low Voltage Ride Through (LVRT) capability	Yes			
DC Protections				
DC overvoltage protection	Yes			
Inverter shutting down on overload error	Yes			
PV-field isolation detector	Yes			
Panel disconnection capability	Yes. DC Contactor			
Other Protections				
Breaker protections of auxiliary systems	Yes			
Auxiliary systems overvoltage protection	Yes			
Power Control Features				
Reactive control by external signal	Yes			
Reactive control by internal configuration	Yes. Timetable PF configuration or voltage dependent function			
Reactive injection for LVRT	Yes. Configurable operation mode			
Over frequency active power response	Yes. Configurable droop			
Ramp rate control	Yes. Under irradiance value restriction			
External power limitation	Yes			
STATCOM mode: Reactive injection at night	Optional (requires additional elements)			
Interfaces				
Touch-HMI	Optional			
MODBUS RTU/TCP communication protocol	Optional			
Luminous indicator, start/stop control	Yes			
Emergency stop	Optional (requires additional elements)			
Remote monitoring system, with GSM/GPRS modem	Optional (requires additional elements)			
Legal standards				
IEC 62109-1, IEC 62109-2	Yes			
NEC Compliance	Yes			
United States - UL 1741 Listing Mark	Certification in process			
Canada - cUL Listing Mark	Certification in process			
CSI/CEC Performance Testing (California)	Certification in process			
IEEE 1547	Certification in process			

Notes
1. At 100% U AC, nom and cos = 1
2. Further AC voltages can be configured
3. Self-consumption at rated operation

GPTech