NOTE:
WE RESERVE THE RIGHT TO MAKE TECHNICAL CHANGES OR MODIFY THE CONTENTS OF THIS DOCUMENT WITHOUT PRIOR NOTICE. WITH REGARD TO PURCHASE ORDERS, THE AGREED PARTICULARS SHALL PREVAIL.
FARADY DOES NOT ACCEPT ANY RESPONSIBILITY WHATSOEVER FORPOTENTIAL ERRORS OR POSSIBLE LACK OF INFORMATION IN THIS DOCUMENT.WE RESERVE ALL RIGHTS IN THIS DOCUMENT AND IN THE SUBJECT MATTER AND ILLUSTRATIONS CONTAINED THERE IN. ANY REPRODUCTION, DISCLOSURE TO THIRD PARTIES OR UTILIZATION OF ITS CONTENTS – IN WHOLE OR IN PART – IS FORBIDDEN WITHOUT FARADY' S PRIOR WRITTEN CONSENT.
COPYRIGHT 2019 FARADY
ALL RIGHTS RESERVED.

COPYRIGHT 2019 FARADY ELECTRIC
ZHEJIANG FARADY ELECTRIC CO.,LTD
TEL:0086-577-61722510/61777258
FAX:0086-577-61777257
HTTP://WWW.FARADY.CN
EMAIL:INFO@FARADY.CN
ADD:NO. 888, WANLI ROAD, XIANGYANG INDUSTRIAL ZONE, YUEQING CITY, ZHEJIANG PROVINCE , CHINA

INNOV TION CHANGE LIFE
FARADY®

ISO9001&ISO14001 CERTIFICATED ENTERPRISE

THREE PHASE DISTRIBUTION TRANSFORMER

OIL IMMERSED

CATALOGUE
ZHEJIANG FARADY ELECTRIC CO., LTD

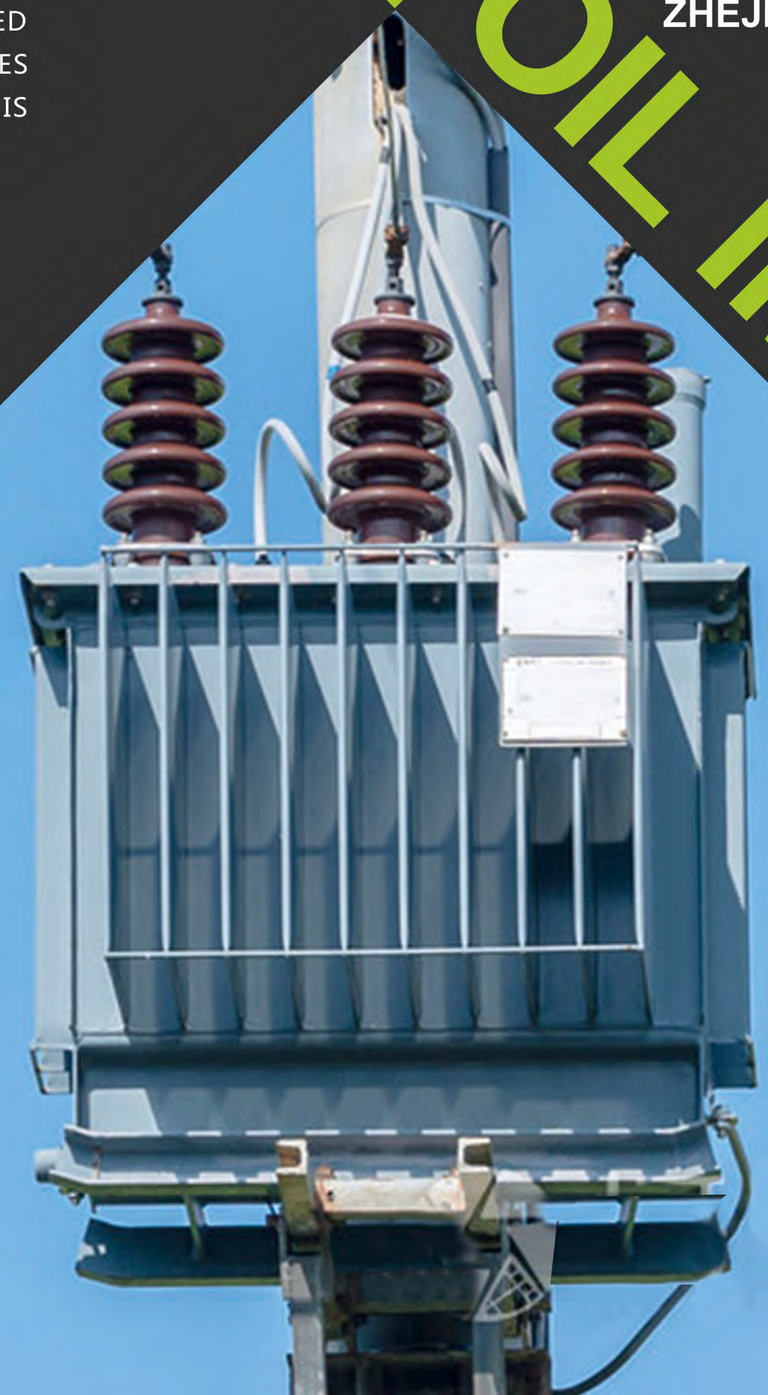

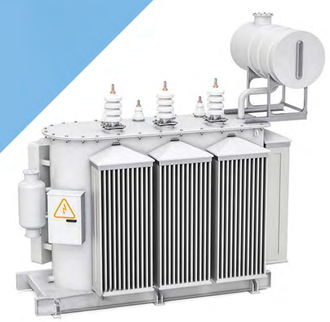

PRODUCT OVERVIEW

GENERAL

FARADY OFFERS A COMPLETE RANGE OF DISTRIBUTION TRANSFORMERS DESIGNED TO GRANT THE RELIABILITY, DURABILITY, AND EFFICIENCY REQUIRED IN UTILITY, INDUSTRIAL, AND COMMERCIAL APPLICATIONS. FARADY'S LIQUID-FILLED TRANSFORMERS ARE MANUFACTURED IN ACCORDANCE WITH THE MOST DEMANDING INDUSTRY AND INTERNATIONAL STANDARDS. COMPLIANCE WITH IMPORTANT STANDARDS, FROM IEC TO VDE, IS A MATTER OF COURSE, JUST AS MUCH AS THE EXCLUSIVE USE OF HIGH-QUALITY MATERIALS. QUALIFIED EMPLOYEES IMPLEMENT THE DEMANDING STANDARDS IN DAILY PRACTICE.

STANDARD FEATURES

-- Product Range:15kVA-10000kVA, up to 44kV
-- System voltage: max. 36 kVA 200 BIL
-- Coolers: corrugated wall or radiator
-Oil preservation: hermetically sealed or conservator/free breathing
-- Tap changer: off-circuit or on-load
-- Cooling medium: mineral oil, Midel
-- Steel type core clamping system
-- High voltage (HV) multilayer winding
-- Low voltage (LV) foil winding or layer winding
-- Winding materials aluminium or copper
-- High temperature class transformers
-- Low noise solution
-- Efficient transformers with reduced losses
-- Liquid-filled
-- Used in special conditions
-- Sophisticated facilities
-- Usage of wooden case
-- 3D package for drawings
-- Special test like Zero Sequence Impendence test
-- Cooling: ONAN, ONAN/ONAF, KFAF, KFW

SERVICE CONDITION

a) Suitable for indoor or outdoor application
b)Air temperature: Maximum temperature: +40℃; Minimum tempera ture:-30℃
c) Humidity: Monthly average humidity 95%; Daily average humidity 90% .
d) Altitude above sea level: Maximum installation altitude: 2000m.
e)Max wind speed:35M/s
f) Ambient air not apparently polluted by corrosive and flammable gas, vapor etc.
g) No frequent violent shake
Note: * Beyond those services condition should enquiry to manufacturer technical dept during order

TESTS

- Voltage ratio. Polarity and phase relationship test on each tapping
- Resistance of all windings
- No-load current and no-load losses measurement
- Load losses measurement at rated current and frequency
- Impedance voltage measurement
- Induced over-voltage and separate source voltage withstand tests
- Impulse voltage withstand test.
- Noise level test
- Oil leakage test
- Overload test at 150% rated current for one hour after temperature rise test and hot resistance measurement of (HV – LV)

CUSTOM WORK- IN MACROCOSM AND IN MICROCOSM

1.THE IRON CORE

Whether in design, manufacturing methods or materials the cores of Farady transformers represent the latest state of technology. The silicon alloyed electric sheet steel used is grain-oriented, cold-rolled and insulated on both sides, guaranteeing low losses and noise and these values are even improved by laser treatment. Numerically controlled cutting machines provide for careful treatment in the cutting process in order to avoid mechanical tension in the core and thus unwanted properties right from the beginning. Standard use of step-lap cutting additionally minimizes losses and noise.

2.THE WINDING

The winding as the centerpiece of the transformer must be especially protected –both against high electrical stress due to external over voltages and against mechanical overloads by short circuits. Farady transformers are systematically designed to meet these requirements. The windings are made of copper or aluminum. Low-voltage windings are made of strip or flat wire, and the high voltage windings are manufactured from round or profile wire. The use of insulating paper that is partially coated with epoxy resin ("diamond-dotted paper") bonds the winding into a compact block while drying and increases the short-circuit capacity additionally.

3.THE TANK

Whether during transport or operation –the tank must be absolutely tight under mechanical stress. Preconditions to achieve this are constructional experience, the most modern calculation methods and high-quality welding work. Special attention is paid to corrosion protection. Pretreatment of the surface bysandblasting contributes to corrosion protection, just like multi coating with preset drying times for each layer. On request, hot-dip galvanization provides for even better protection. The tank must dissipate the entire heat loss of the transformer into the ambient air. This makes the volume of the transformer fluid change. In hermetically sealed transformers, the corrugated walls absorb the change in volume. In the case of expansion tank transformers, the conservator compensates this change. The sheet-steel lids of Farady transformers are bolted together with the tank – or welded on request. In any case the steel thickness and the bracing is dimensioned in such a way that the lid withstands the stress of transport and operation.

OVERVIEW OF S11 SERIES TRANSFORMER MANUFACTURE

WINDING AND ASSEMBLY AREA

IRON CORE EQUIPMENT AREA

TEST AREA AND WAREHOUSE

TECHNICAL SPECIFICATION

S11-M SERIES THREE PHASE TWO WINDINGS
OFF-LOAD TAP CHANGER TRANSFORMER

11KV SERIES

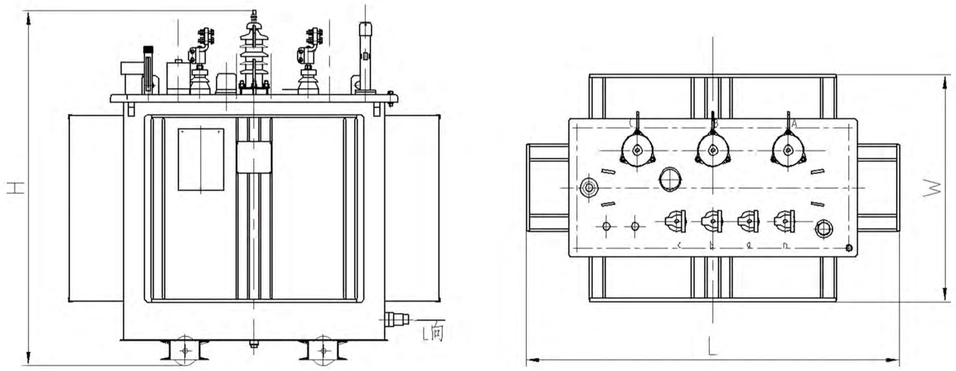

KVA	VOLTAGE		VECTOR GROUP	LOSSES		NO-LOAD CURRENT	WEIGHT(KG)		OVERALL DIMENSION MM		
	H.V KV	L.V V		NO-LOAD LOSS	LOAD LOSS		OIL WEIGHT	TOTAL WEIGHT	L	W	H
25	6 6.3 10 10.5 11 13.2	380 400 415 433	YYN0 DYN11 YZN11	100	550	2.3	55	230	720	440	855
30				130	630	2.1	75	305	750	500	990
50				170	910	2.0	80	405	800	480	1030
63				200	1090	1.9	95	455	830	615	1060
80				240	1310	1.9	105	510	840	580	1115
100				290	1580	1.8	120	530	890	645	1145
125				340	1890	1.7	130	670	910	600	1185
160				400	2310	1.6	140	810	910	700	1280
200				480	2730	1.5	160	890	1000	760	1240
250				560	3200	1.4	175	1020	1285	730	1290
315				670	3830	1.4	185	1170	1280	740	1385
400				800	4520	1.3	215	1410	1310	750	1432
500				960	5410	1.2	260	1645	1365	765	1510
630				1200	6200	1.1	310	2070	1485	815	1615
800				1400	7500	1.0	370	2445	1640	930	1590
1000				1700	10300	1.0	425	2800	1860	1120	1630
1250				1950	12000	0.9	480	3320	1860	1120	1830
1600				2400	14500	0.8	550	4175	1975	1175	1900

NOTE: *THE ABOVE PARAMETER IS ONLY SUBJECT TO OUR STANDARD DESIGN, SPECIAL REQUIREMENT CAN BE CUSTOMIZED

22KV SERIES

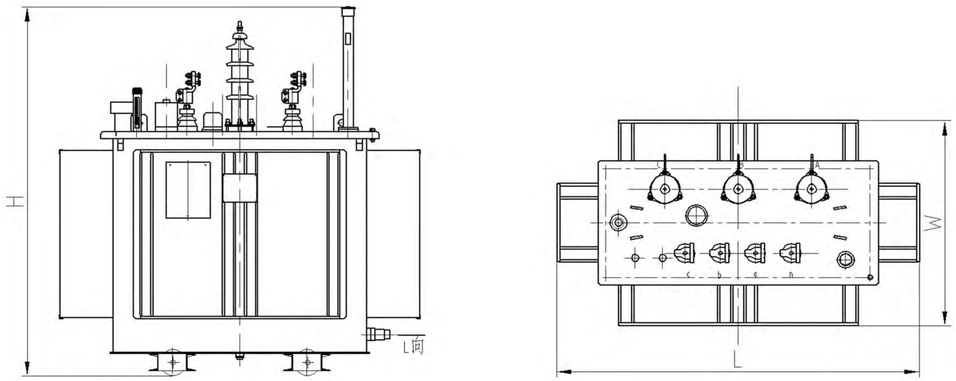

KVA	VOLTAGE		VECTOR GROUP	LOSSES		NO-LOAD CURRENT	WEIGHT(KG)		OVERALL DIMENSION MM		
	H.V KV	L.V V		NO-LOAD LOSS	LOAD LOSS		OIL WEIGHT	TOTAL WEIGHT	L	W	H
25	20 22 24	380 400 415 433	YYN0 DYN11 YZN11	120	590	2.3	75	230	880	610	855
30				135	750	2.1	100	305	900	610	990
50				175	1050	2.0	185	515	920	610	1150
63				200	1260	1.9	195	550	920	630	1180
80				240	1510	1.9	200	600	930	650	1200
100				265	1820	1.8	210	695	950	680	1250
125				320	2180	1.7	235	810	960	780	1270
160				370	2670	1.6	255	950	1160	710	1330
200				450	3150	1.5	280	1065	1190	730	1340
250				530	3690	1.4	300	1200	1280	820	1360
315				635	4410	1.4	320	1360	1380	910	1390
400				755	5200	1.3	370	1580	1430	950	1470
500				900	6220	1.2	400	1790	1520	1020	1510
630				1070	7500	1.1	460	2100	1680	1150	1530
800				1295	9075	1.0	495	2420	1810	1280	1580
1000				1520	12460	1.0	590	3080	1840	1290	1690
1250				1800	14540	0.9	630	3460	1850	1300	1730
1600				2170	17545	0.8	710	4015	1920	1350	1790

NOTE: *THE ABOVE PARAMETER IS ONLY SUBJECT TO OUR STANDARD DESIGN, SPECIAL REQUIREMENT CAN BE CUSTOMIZED

TECHNICAL SPECIFICATION
S11-M SERIES THREE PHASE TWO WINDINGS
OFF-LOAD TAP CHANGER TRANSFORMER

TECHNICAL SPECIFICATION

S11-M SERIES THREE PHASE TWO WINDINGS
OFF-LOAD TAP CHANGER TRANSFORMER

33KV SERIES

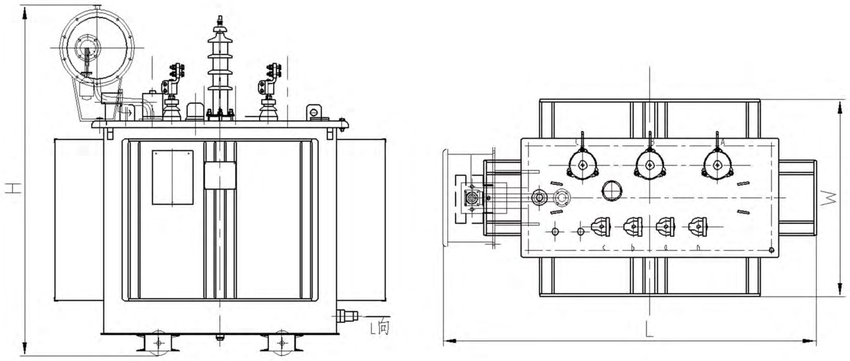

KVA	VOLTAGE		VECTOR GROUP	LOSSES		NO-LOAD CURRENT	WEIGHT(KG)		OVERALL DIMENSION MM		
	H.V KV	L.V V		NO-LOAD LOSS	LOAD LOSS		OIL WEIGHT	TOTAL WEIGHT	L	W	H
25	30 30.8 33 35 38.5	380 400 415 433	YYN0 DYN11 YZN11	90	800	2.3	185	540	720	900	1200
30				100	1000	2.1	190	550	880	900	1200
50				210	1270	2.0	205	590	900	950	1450
63				230	1500	1.9	210	620	1000	950	1500
80				250	1750	1.9	225	660	1020	970	1550
100				290	2120	1.8	240	790	1050	1000	1600
125				340	2500	1.7	270	950	1080	1030	1630
160				360	2970	1.6	285	1020	1100	1060	1630
200				430	3500	1.5	325	1170	1130	1060	1670
250				510	4160	1.4	340	1340	1190	1160	1700
315				610	5010	1.4	400	1530	1260	1240	1790
400				730	6050	1.3	490	1780	1280	880	1900
500				860	7280	1.2	510	1960	1960	940	1920
630				1040	8280	1.1	600	2290	2020	1010	2010
800				1230	9900	1.0	660	2640	2070	1040	2150
1000				1440	12150	1.0	735	3100	2240	1200	2150
1250				1760	14670	0.9	830	3630	2300	1280	2250
1600				2120	17550	0.8	935	4235	2450	1510	2350

NOTE: *THE ABOVE PARAMETER IS ONLY SUBJECT TO OUR STANDARD DESIGN, SPECIAL REQUIREMENT CAN BE CUSTOMIZED

TECHNICAL SPECIFICATION
S11-M SERIES THREE PHASE TWO WINDINGS
OFF-LOAD TAP CHANGER TRANSFORMER