ZTNE 48 SERIES

Electric performance parameters

The electrical paramenters of standard test conditions										
Name of component			ZT220							
Component specification			ZT220P-48/1-23b							
Peak power	P_{max}	W	180	185	195	200	205	210	215	220
Power tolerance	ΔP_{max}	W	±3							
Module efficiency	η_m	%	13.87	14.26	15.03	15.42	15.8	16.19	16.57	16.96
Peak power voltage	V_{mpp}	V	23.5	24.0	25.0	25.5	26.0	26.5	27.0	28.0
Peak power current	I_{mpp}	A	7.66	7.71	7.8	7.84	7.88	7.92	7.96	7.86
Open circuit voltage	V_{oc}	V	32.7	32.8	30.4	30.8	31.3	31.5	31.9	32.3
Short circuit current	I_{sc}	A	8.57	8.69	8.67	8.72	8.77	8.82	8.87	8.92

STC: Irradiance1000W/m², battery temperature25°C, atmospheric qualityAM1.5, according to EN60904-3

when the irradiance is 200W/m², the average efficiency loss by 5%, according to EN 60904-3.

Temperature coefficient

Nominal operating temperature	NOCT	°C	46 +/- 2
Temperature coefficients of (P_{max})	γ	%/°C	-0.45
Temperature coefficients of (V_{oc})	β_{Voc}	%/°C	-0.37
Temperature coefficients of (I_{sc})	αI_{sc}	%/°C	0.06

Operating conditions

Maximum system voltage	1000 V_{DC}
Largest fuse rating	15 A
Reverse current	The external voltage can not be greater than the open circuit voltage
Operating temperature	-45 ~ 85°C
Positive maximum static load(snow load and wind load)	5400 Pa
Back maximum static load(wind load)	2400 Pa
Hail test(hail diameter/impact speed)	25mm / 23m/s

Structural meterials

Glass(material/thickness)	Low iron tempered glass/3.2mm
Battery(quantity/kind/size)	48/Polycrystalline/1/1
Encapsulation(material)	EVA
Aluminum frame(material/color/color of anodic oxidation film)	Anodic oxidation aluminum/silver/transparency

- Because of the continuous innovation, research and product upgrade , the content in the product specification is usually possible to change without prior notice . These content, there may be a slight deviation and its content is not guaranteed.
- These data are not for single component, they are also not a part of the sales, they are only used for different types of components.

General features

Size(length/breadth/height)	1310mmx990mmx35mm
Weight	15.2kg

Packing specification

Number of component in each box	4
Packing size(length/breadth/height)	1330mmx1010mmx180mm

Unit: mm

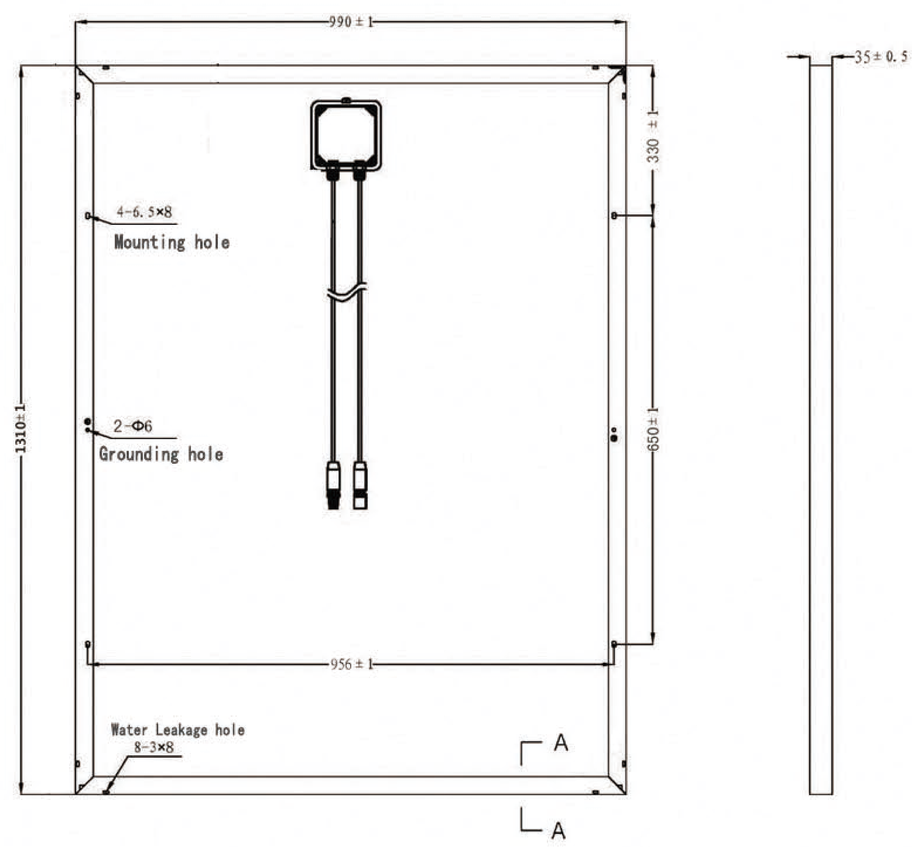

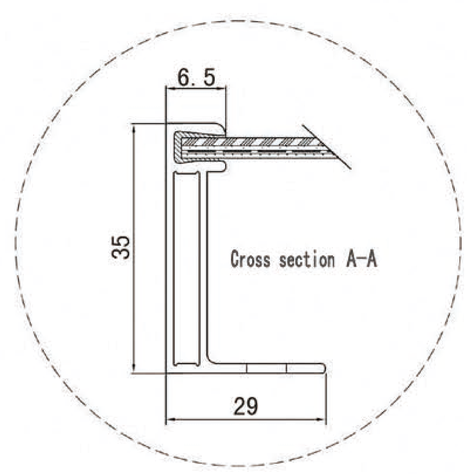

Warning: Before the operation to install and run zhongtai components, please first read carefully the installaton instruction.

BaoDing ZHONGTAI new energy technology co., LTD
ADD: Hi-tech industrial park, North Yongsheng Street, Baoding, Hebei, China
E-mail: 2755189147@qq.com
Internet: ZTSOLARKJ.COM
Tel: 0312-5399693/5396622
Fax: 0312-5399601

中泰 ZHONG TAI

SOLAR PRODUCT CERTIFICATION CQC CHINA QUALITY CERTIFICATION CENTRE

CE