S4500 TL S9000 TL

S34.135.340 S38.335.340

MAXIMUM EFFICIENCY

98.9 %

NOMINAL AC VOLTAGE

330 V_{AC} ± 10%

BATTERY VOLTAGE RANGE

610 - 1.000V_{DC}

UP TO IP31 | IN C.U. IP53 (OPT. IP54) | CE | LVFRT | OVER FREQ. P REDUCTION | CIRCULAR CAPABILITY | Q=f(V)

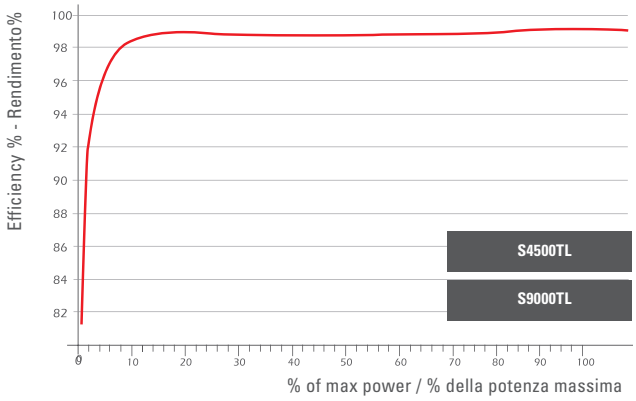

Advantage

> High eff ciency, up to 99%.
> Modular inverter (MPS system).
> Elimination of machine down-times.
> Easy maintenance.
> Large lifetime.

> Elevato rendimento fino al 99%.
> Inverter modulari (sistema MPS).
> Eliminazione dei fermi macchina.
> Facilità nelle operatività di manutenzione.
> Lunga durata dei componenti.

Features

> Use of a single magnetic component each module.
> Advance modularity (according to IPCCM algorithm).
> Continual monitoring of the system and integrated datalogger.
> Outbound communication.

> Impiego di un singolo componente magnetico per ciascun modulo.
> Modularità all'avanguardia (secondo l'algoritmo IPCCM).
> Supervisione continua del sistema e datalogger integrato.
> Comunicazione verso il mondo esterno.

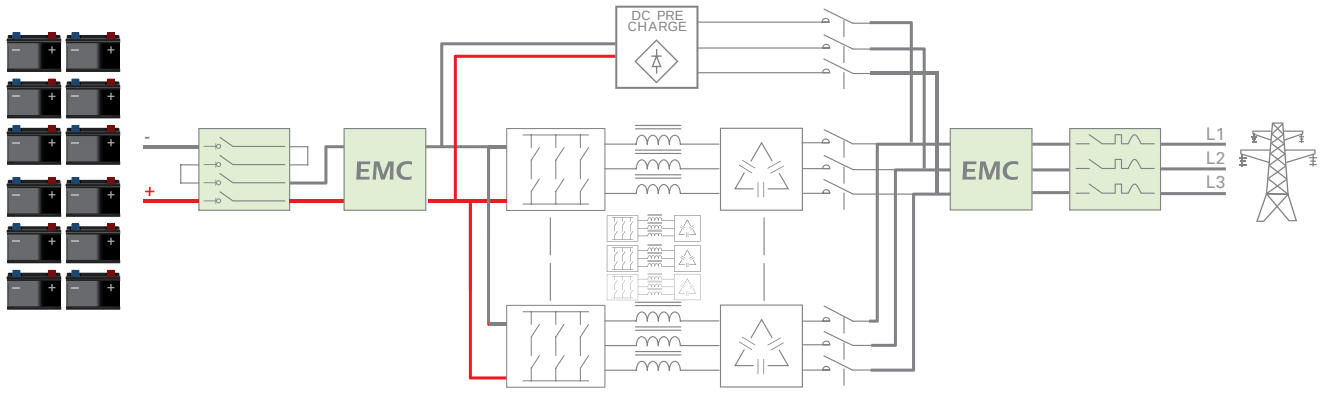

Note: Block diagram refers to the converter S4500TL
Lo schema a blocchi si riferisce al convertitore S4500TL

S4500 TL
S9000 TL

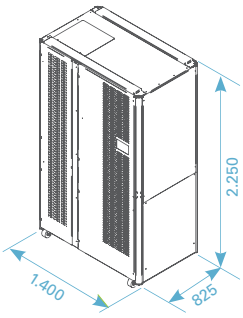

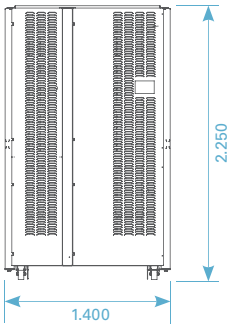

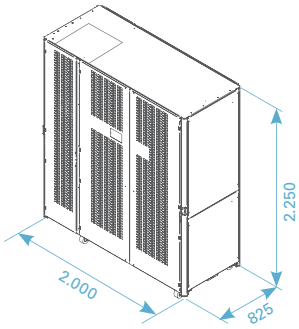

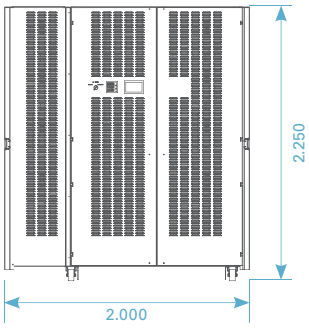

DC Input - PV Module

Model	S4500 TL	S9000 TL
Battery voltage Range (V_{DC})	610 – 1.000	610 – 1.000
Battery type	Li-ion, Lead, Ni-Cd, $NaNiCl_2$	Li-ion, Lead, Ni-Cd, $NaNiCl_2$
Absolute Maximum Voltage (V_{DC})	**1.100**	**1.100**
Maximum input current (A_{DC})	800	1.600
Voltage Ripple	<2%	<2%
Number of input max in parallel	4	4
Overvoltage Protection	SPD varistor device Class II (optional Class I+II)	SPD varistor device Class II (optional Class I+II)
DC input connection	DC Switch under load	DC Switch under load
Reverse Polarity Protection	Yes	Yes

AC Output grid

Max Power (kW) (Note1)	**416 kW**	**833 kW**
Max Apparent Power (kVA)	416 kVA	833 kVA
Max Current (A_{AC})	730	1.460
Max unbalance Current	< 2%	< 2%
Nominal Voltage (V_{AC})	**$330V_{RMS}$ ±10%**	**$330V_{RMS}$ ±10%**
Frequency (Hz)	50 / 60 Hz	50 / 60 Hz
Nr Phase	3 (L1 – L2 – L3 – PE)	3 (L1 – L2 – L3 – PE)
Aux Supply (Normal Line) (V_{AC} - I_{AC})	230Vac – 16A – 50/60Hz (L-N)	230Vac – 16A – 50/60Hz (L-N)
Aux Supply (Preferential Line) (V_{AC} - I_{AC})	230Vac – 10A – 50/60Hz (L-N)	230Vac – 10A – 50/60Hz (L-N)
Distortion factor (THDi) (Note 2)	<3%	<3%
Power Factor (Note 3)	From 0 to 1 inductive or capacitive	From 0 to 1 inductive or capacitive
Galvanic insulation	No (Transformerless)	No (Transformerless)
AC input connection	Magneto-thermic Circuit Breaker (MCCB)	Magneto-thermic Circuit Breaker (MCCB)

General Data

Max Efficiency	**98,9%**	**98,9%**
European Efficiency	98,6%	98,6%
Night consumption (W)	<60	<60
Weight (kg)	1.100	1.600
Protection degree	IP20 (Opt. IP31)	IP20 (Opt. IP31)
Cooling	Air forced cooling fan speed controlled	Air forced cooling fan speed controlled
Air Flow	2.400 m³/h	4.800 m³/h
Maximum power dissipated in overload condition	12,5 kW - 10.705 Kcal/h	24,9 kW - 21.410 Kcal/h
Noise level (dBA)	70 dBA	70 dBA
Dimensions (H x L x P)	2.250 x 1.400 x 825	2.250 x 2.000 x 825
Operating temperature (°C)	- 10 ÷ +53	- 10 ÷ +53
Storage temperature (°C)	- 20 ÷ +60	- 20 ÷ +60
Humidity (Not condensing) (%)	0 ÷ 95	0 ÷ 95
Height above the sea without derating (Note 4)	1.500 m	1.500 m
Overvoltage Category	II	II
Color	RAL 9006	RAL 9006

Note 1: Valid at P.F.=1and Vac nominal
Note 2: THDi is lower than 3% for inverter power greater than 25%.
Note 3: P-Q capability is circular.
Note 4: Above 1.500 m derate the Maximum Operating Temperature of 0.4 °C per 100 m up to 3.000 m a.s.l.

Note: Each inverter must be connected separately to its own LV/MV transformer or it has to be connected to a separate LV secondary input of the LV/MV transformer. Two or more inverters cannot be connected in parallel to the same LV secondary input of the LV/MV transformer.