ZTNE 36 SERIES

Electric performance parameters

The electrical paramenters of standard test c)			
Name of component			ZT130
Component specification			ZT130P-36/1-17b
Peak power	P_{max}	W	130
Power tolerance	ΔP_{max}	W	±3
Module efficiency	η_m	%	13.85
Peak power voltage	V_{mpp}	V	17.60
Peak power current	I_{mpp}	A	7.38
Open circuit voltage	V_{oc}	V	22.10
Short circuit current	I_{sc}	A	8.05

STC: Irradiance1000W/m², battery temperature25°C, atmospheric qualityAM1.5, according to EN60904-3

when the irradiance is 200W/m², the average efficiency loss by 5%, according to EN 60904-3.

Temperature coefficient

Nominal operating temperature	NOCT	°C	46 +/- 2
Temperature coefficients of (P_{max})	γ	%/°C	-0.45
Temperature coefficients of (V_{oc})	β_{Voc}	%/°C	-0.37
Temperature coefficients of (I_{sc})	αI_{sc}	%/°C	0.06

Operating conditions

Maximum system voltage	1000 V_{DC}
Largest fuse rating	15 A
Reverse current	The external voltage can not be greater than the open circuit voltage
Operating temperature	-45 ~ 85°C
Positive maximum static load(snow load and wind l	5400 Pa
Back maximum static load(wind load)	2400 Pa
Hail test(hail diameter/impact speed)	25mm / 23m/s

Structural meterials

Glass(material/thickness)	Low iron tempered glass/3.2mm
Battery(quantity/kind/size)	36/Polycrystalline/156mmx148mm(19/20)
Encapsulation(material)	EVA
Aluminum frame(material/color/color of anodic oxidation film)	Anodic oxidation aluminum/silver/transparency

- Because of the continuous innovation, research and product upgrade , the content in the product specification is usually possible to change without prior notice . These content, there may be a slight deviation and its content is not guaranteed.
- These data are not for single component, they are also not a part of the sales, they are only used for different types of components.

General features

Size(length/breadth/height)	1400mmx670mmx25mm
Weight	11.8kg

Packing specification

Number of component in each box	4
Packing size(length/breadth/height)	1420mmx690mmx140mm

Unit: mm

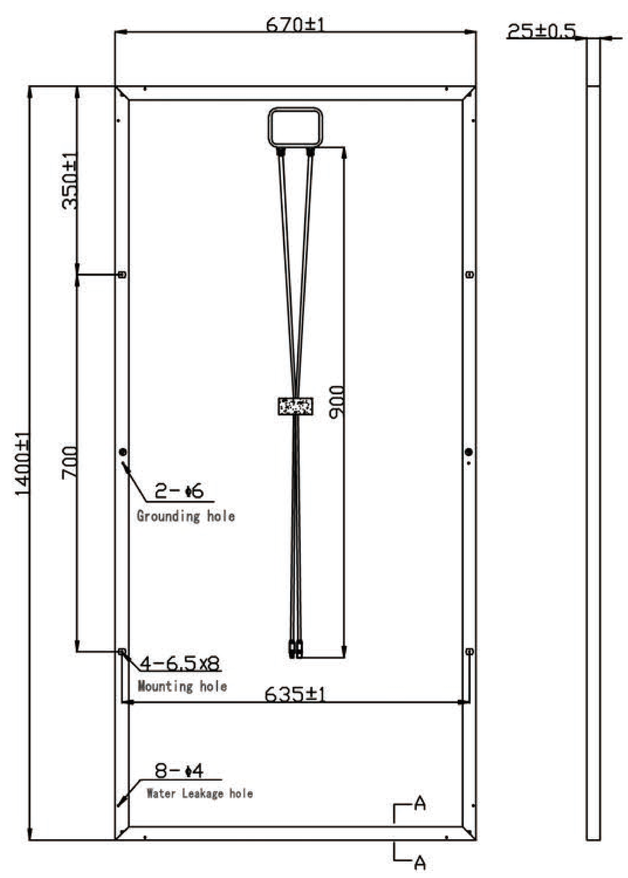

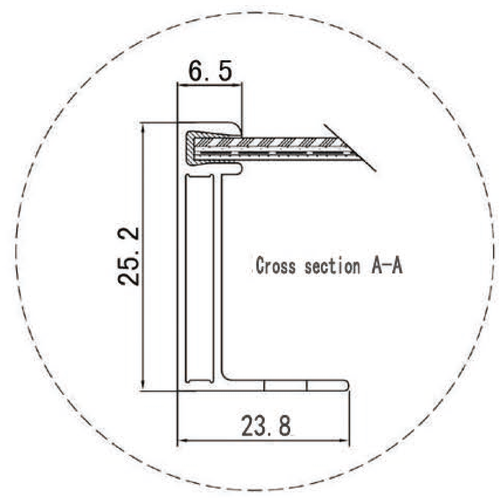

Warning:Before the operation to install and run zhongtai components, please first read carefully the installaton instruction.

BaoDing ZHONGTAI new energy technology co.,LTD
ADD: Hi-tech industrial park, North Yongsheng Street, Baoding, Hebei, China
E-mail:2755189147@qq.com
Internet:ZTSOLARKJ.COM
Tel:0312-5399693/5396622
Fax:0312-5399601

中泰
ZHONG TAI

SOLAR PRODUCT CERTIFICATION CQC CHINA QUALITY CERTIFICATION CENTRE

CE